JSWOP 2013 2013-09-28 Stockholm G18-63

Competitors: 11

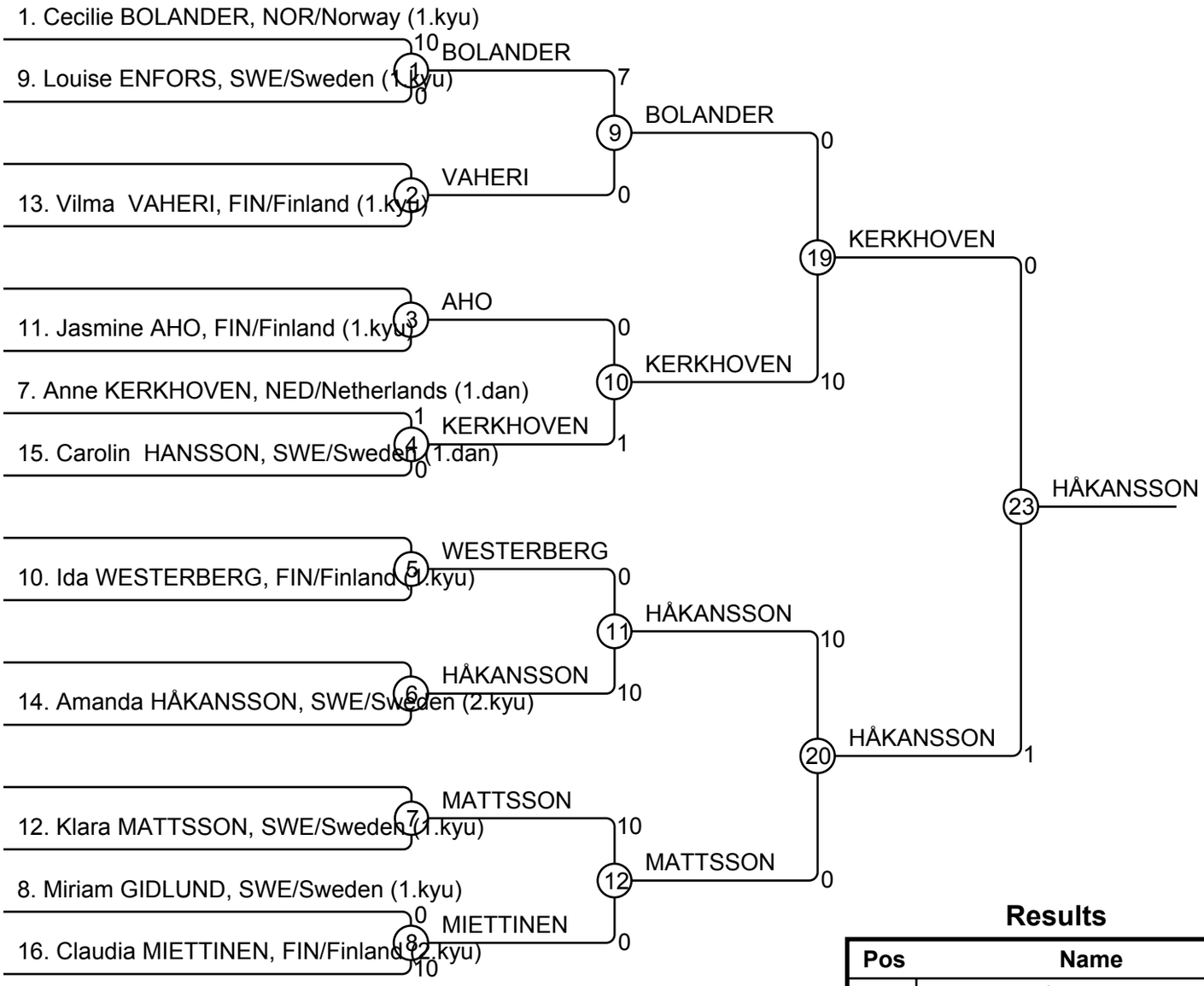

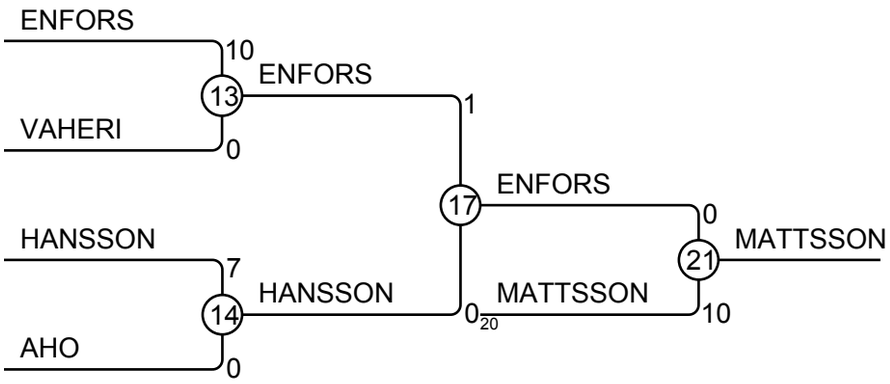

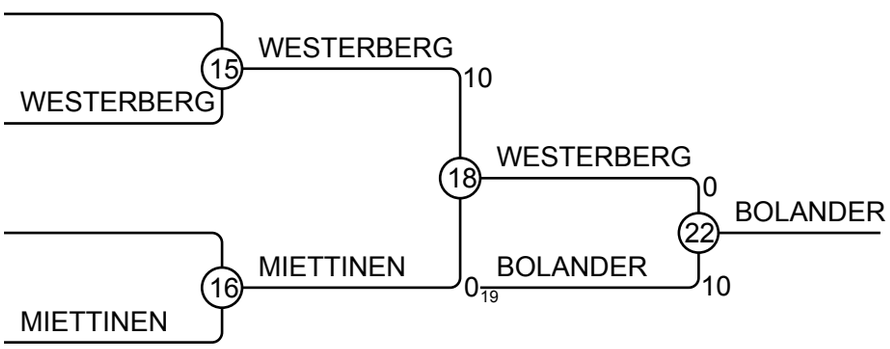

Results

Pos	Name
1	Amanda HÅKANSSON, SWE/Swede
2	Anne KERKHOVEN, NED/Netherland
3	Klara MATTSSON, SWE/Sweden
3	Cecilie BOLANDER, NOR/Norway
5	Louise ENFORS, SWE/Sweden
5	Ida WESTERBERG, FIN/Finland
7	Carolin HANSSON, SWE/Sweden
7	Claudia MIETTINEN, FIN/Finland