Swedish Open Juniors & Cadets 2011-09-17 G17-48

Competitors: 8

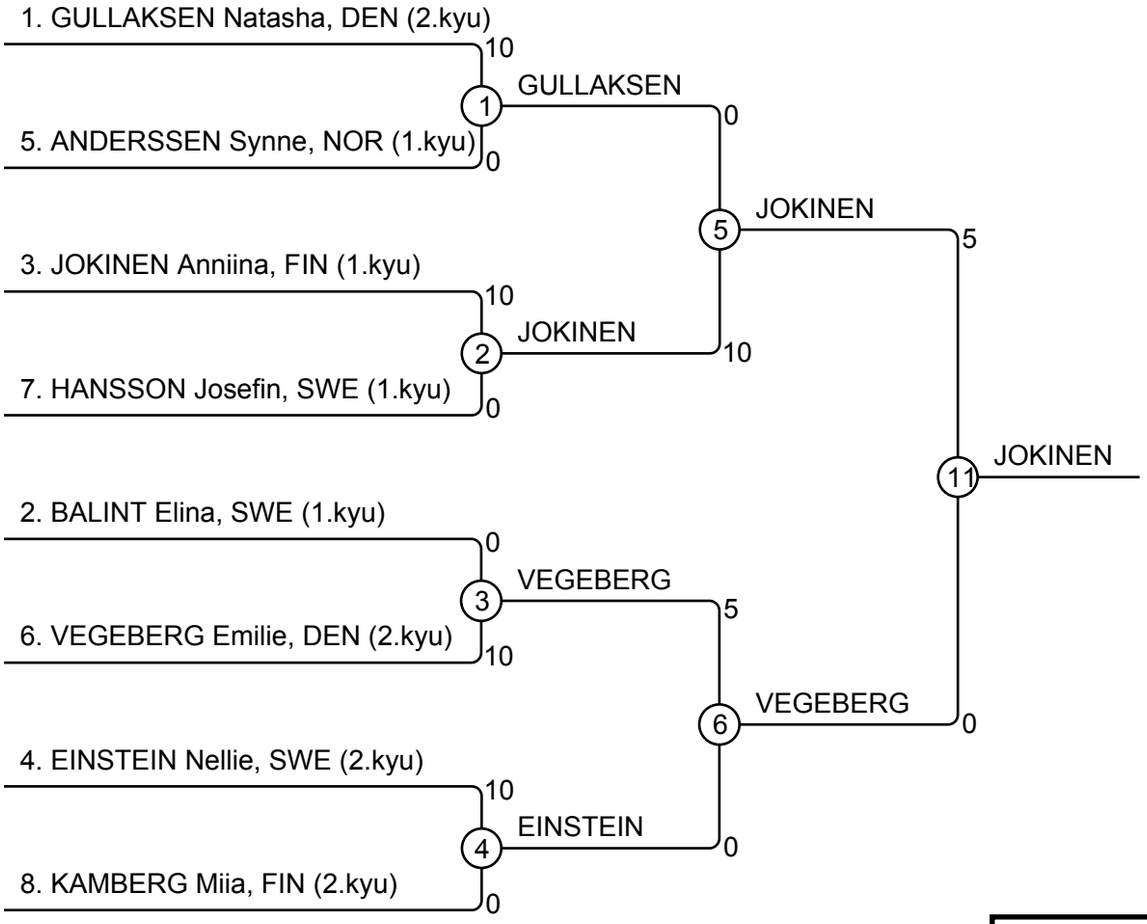

Results
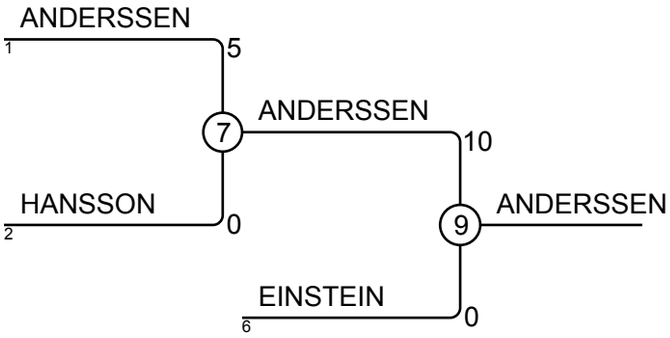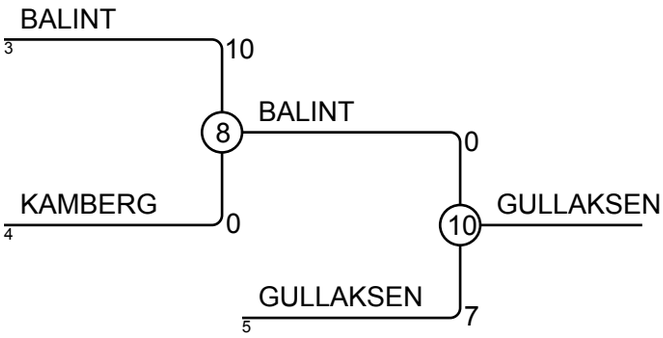
Pos	Name
1	JOKINEN Anniina, FIN
2	VEGEBERG Emilie, DEN
3	ANDERSSEN Synne, NOR
3	GULLAKSEN Natasha, DEN
5	EINSTEIN Nellie, SWE
5	BALINT Elina, SWE
7	HANSSON Josefin, SWE
7	KAMBERG Miia, FIN